Cambridge International AS & A Level

Cambridge Assessment International Education
Cambridge International Advanced Subsidiary and Advanced Level

PHYSICS **9702/13**

Paper 1 Multiple Choice **October/November 2019**

1 hour 15 minutes

Additional Materials: Multiple Choice Answer Sheet
Soft clean eraser
Soft pencil (type B or HB is recommended)

* 2 3 2 9 7 6 1 2 0 7 *

READ THESE INSTRUCTIONS FIRST

Write in soft pencil.
Do not use staples, paper clips, glue or correction fluid.
Write your name, centre number and candidate number on the Answer Sheet in the spaces provided unless this has been done for you.
DO **NOT** WRITE IN ANY BARCODES.

There are **forty** questions on this paper. Answer **all** questions. For each question there are four possible answers **A**, **B**, **C** and **D**.
Choose the **one** you consider correct and record your choice in **soft pencil** on the separate Answer Sheet.

Read the instructions on the Answer Sheet very carefully.

Each correct answer will score one mark. A mark will not be deducted for a wrong answer.
Any working should be done in this booklet.
Electronic calculators may be used.

IB19 11_9702_13/3RP
© UCLES 2019

Data

speed of light in free space	$c = 3.00 \times 10^{8}\,\text{m s}^{-1}$
permeability of free space	$\mu_0 = 4\pi \times 10^{-7}\,\text{H m}^{-1}$
permittivity of free space	$\varepsilon_0 = 8.85 \times 10^{-12}\,\text{F m}^{-1}$
	$\left(\frac{1}{4\pi\varepsilon_0} = 8.99 \times 10^{9}\,\text{m F}^{-1}\right)$
elementary charge	$e = 1.60 \times 10^{-19}\,\text{C}$
the Planck constant	$h = 6.63 \times 10^{-34}\,\text{J s}$
unified atomic mass unit	$1\,\text{u} = 1.66 \times 10^{-27}\,\text{kg}$
rest mass of electron	$m_\text{e} = 9.11 \times 10^{-31}\,\text{kg}$
rest mass of proton	$m_\text{p} = 1.67 \times 10^{-27}\,\text{kg}$
molar gas constant	$R = 8.31\,\text{J K}^{-1}\,\text{mol}^{-1}$
the Avogadro constant	$N_\text{A} = 6.02 \times 10^{23}\,\text{mol}^{-1}$
the Boltzmann constant	$k = 1.38 \times 10^{-23}\,\text{J K}^{-1}$
gravitational constant	$G = 6.67 \times 10^{-11}\,\text{N m}^2\,\text{kg}^{-2}$
acceleration of free fall	$g = 9.81\,\text{m s}^{-2}$

© UCLES 2019

Formulae

uniformly accelerated motion	$s = ut + \frac{1}{2}at^2$ $v^2 = u^2 + 2as$
work done on/by a gas	$W = p\Delta V$
gravitational potential	$\phi = -\frac{Gm}{r}$
hydrostatic pressure	$p = \rho gh$
pressure of an ideal gas	$p = \frac{1}{3}\frac{Nm}{V}\langle c^2 \rangle$
simple harmonic motion	$a = -\omega^2 x$
velocity of particle in s.h.m.	$v = v_0 \cos \omega t$ $v = \pm\omega\sqrt{(x_0^2 - x^2)}$
Doppler effect	$f_o = \frac{f_s v}{v \pm v_s}$
electric potential	$V = \frac{Q}{4\pi\varepsilon_0 r}$
capacitors in series	$1/C = 1/C_1 + 1/C_2 + \ldots$
capacitors in parallel	$C = C_1 + C_2 + \ldots$
energy of charged capacitor	$W = \frac{1}{2}QV$
electric current	$I = Anvq$
resistors in series	$R = R_1 + R_2 + \ldots$
resistors in parallel	$1/R = 1/R_1 + 1/R_2 + \ldots$
Hall voltage	$V_H = \frac{BI}{ntq}$
alternating current/voltage	$x = x_0 \sin \omega t$
radioactive decay	$x = x_0 \exp(-\lambda t)$
decay constant	$\lambda = \frac{0.693}{t_{\frac{1}{2}}}$

© UCLES 2019

[Turn over

1 Which quantity with its unit is correct?

A acceleration of a bicycle = $1.4\,\text{m}\,\text{s}^{-1}$

B electric current in a lamp = $0.25\,\text{A}\,\text{s}^{-1}$

C electric potential difference across a battery = $8.0\,\text{J}\,\text{C}^{-1}$

D kinetic energy of a car = $4500\,\text{N}\,\text{m}^{-1}$

2 Which two units are **not** equivalent to each other?

A $\text{N}\,\text{m}$ and $\text{kg}\,\text{m}^2\,\text{s}^{-2}$

B $\text{N}\,\text{s}$ and $\text{kg}\,\text{m}\,\text{s}^{-1}$

C $\text{J}\,\text{s}^{-1}$ and $\text{kg}\,\text{m}^2\,\text{s}^{-3}$

D Pa and $\text{kg}\,\text{m}\,\text{s}^{-2}$

3 The arrow represents a vector R.



Which diagram does **not** represent R as two perpendicular components?

A

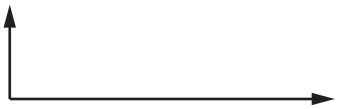

B



C

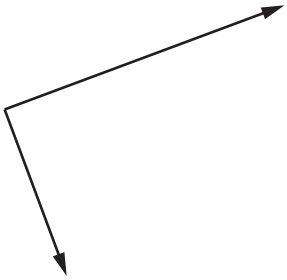

D

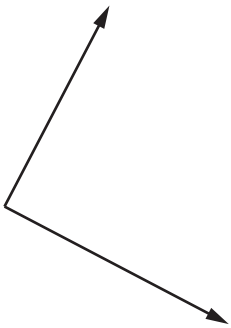

© UCLES 2019

4 What could reduce systematic errors?

A averaging a large number of measurements

B careful calibration of measuring instruments

C reducing the sample size

D repeating measurements

5 The power loss P in a resistor is calculated using the formula $P = \frac{V^2}{R}$.

The percentage uncertainty in the potential difference V is 3% and the percentage uncertainty in the resistance R is 2%.

What is the percentage uncertainty in P?

A 4% **B** 7% **C** 8% **D** 11%

6 A lead sphere is released from rest at point X, a long way above the surface of a planet. The sphere falls in a vacuum. After a time of 4.0 s, it has fallen through a vertical distance of 3.0 m. Assume the acceleration of free fall is constant.

How far will the sphere have fallen from point X at a time of 20 s after its release?

A 15 m **B** 75 m **C** 80 m **D** 2000 m

7 A box rests on the Earth, as shown.

Newton's third law describes how forces of the same type act in pairs. One of the forces of a pair is the weight W of the box.

Which arrow represents the other force of this pair?

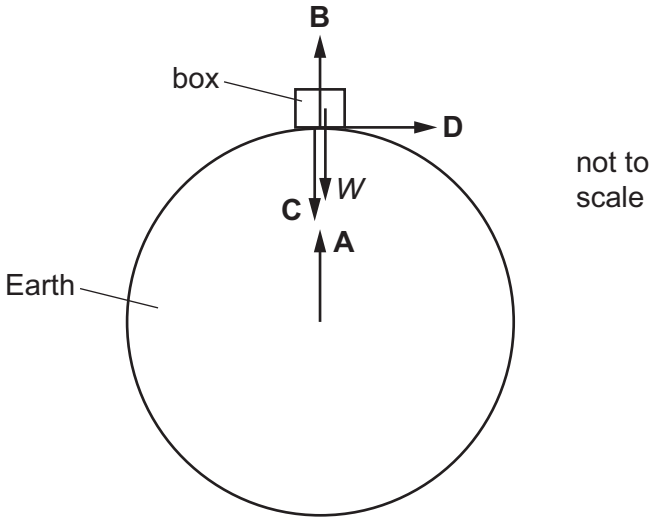

8 A snowflake is falling from the sky on a still day. Its weight acts vertically downwards and air resistance acts vertically upwards. As the snowflake falls, air resistance increases until it is equal to the weight and there is no resultant force acting on the snowflake.



When the forces become equal, which statement is correct?

A The snowflake accelerates.

B The snowflake decelerates.

C The snowflake is stationary.

D The snowflake moves at a constant velocity.

9 Two objects X and Y in an isolated system undergo a perfectly elastic collision. The velocities of the objects before and after the collision are shown.



What is the speed v of Y after the collision?

A $2.0\,m\,s^{-1}$ **B** $18\,m\,s^{-1}$ **C** $22\,m\,s^{-1}$ **D** $24\,m\,s^{-1}$

© UCLES 2019

10 A solid sphere, which is less dense than water, is held completely immersed in water a few metres below the surface. The density of the water is uniform.

The sphere is released. Immediately after release, the sphere rises.

Which row correctly describes the changes in the upthrust on the sphere and the resultant force on the sphere?

	upthrust on the sphere	resultant force on the sphere
A	constant	increasing
B	constant	decreasing
C	decreasing	increasing
D	decreasing	decreasing

11 The diagram shows two pairs X and Y of parallel forces.

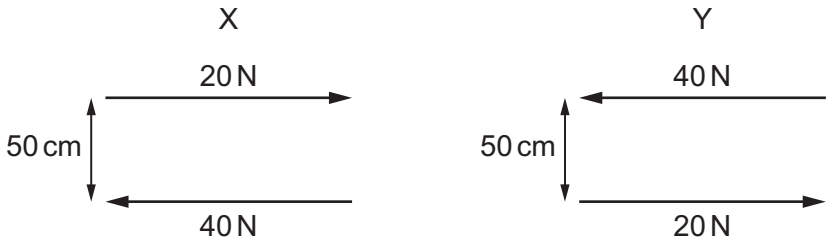

Which statement is correct?

A X is equivalent to a clockwise torque of 10 N m and a force of 20 N to the left.

B X is equivalent to a clockwise torque of 20 N m only.

C Y is equivalent to an anticlockwise torque of 30 N m and a force of 20 N to the left.

D Y is equivalent to an anticlockwise torque of 30 N m only.

12 A heavy ball hanging from a cable is held in equilibrium by a chain, as shown.

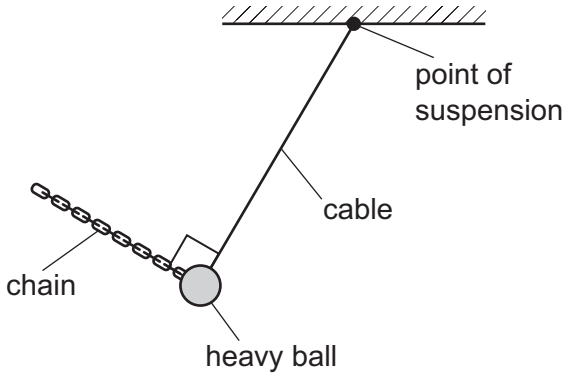

Which vector diagram shows the three forces acting on the ball?

A

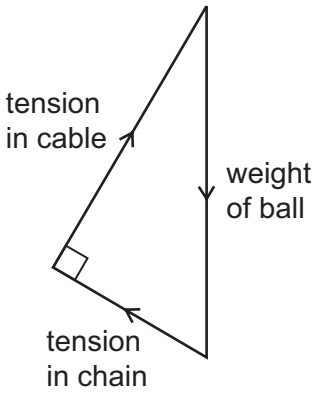

B

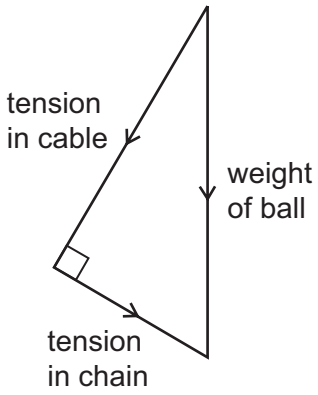

C

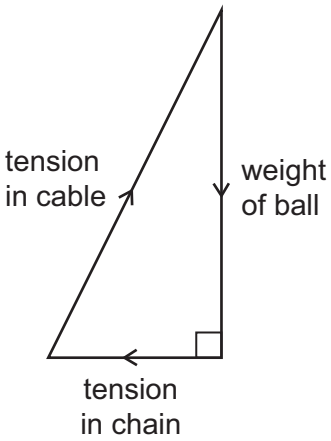

D

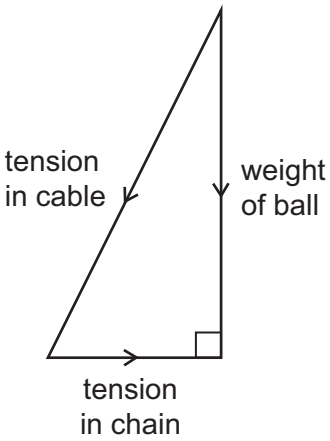

© UCLES 2019

13 At sea level, atmospheric pressure is 100 kPa and the density of air is 1.3 kg m^{-3}.

Assume that the density of air decreases linearly with height above sea level.

What is an estimate of the total height of the atmosphere based on this information?

A 7.8 km **B** 16 km **C** 77 km **D** 150 km

14 Trains supply coal to a power station. The table shows quantities describing the operation of the power station.

	symbol	unit
power station average output	*P*	W
number of trains per day	*N*	
mass of coal on a train	*M*	kg
energy from 1 kg of coal	*E*	J
number of seconds in one day	*S*	

Which expression gives the efficiency of the power station?

A $\frac{PS}{NME}$ **B** $\frac{PSN}{ME}$ **C** $\frac{NME}{PS}$ **D** $\frac{NM}{PSE}$

15 A piston in a gas supply pump has an area of 500 cm^2 and it moves a distance of 30 cm.

The pump moves the gas against a fixed pressure of 4000 Pa.

How much work is done by the piston?

A 60 J **B** 6.0×10^3 J **C** 6.0×10^5 J **D** 6.0×10^7 J

16 A steel ball is falling at constant speed in oil.

Which graph shows the variation with time of the gravitational potential energy E_p and the kinetic energy E_k of the ball?

A

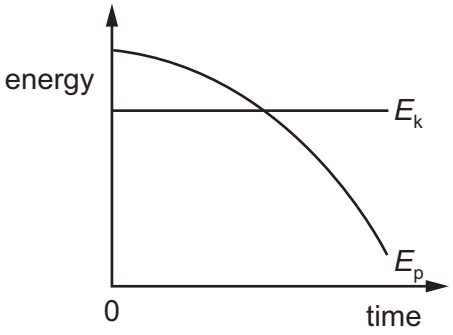

B

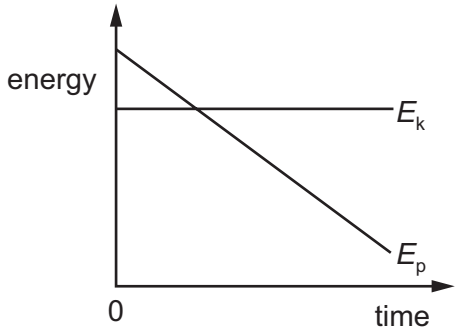

C

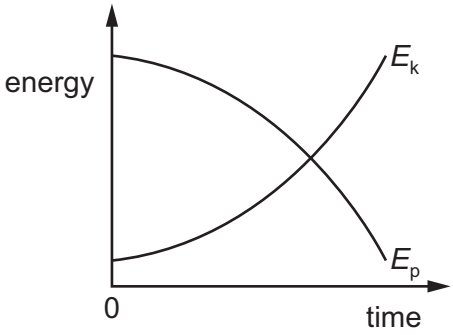

D

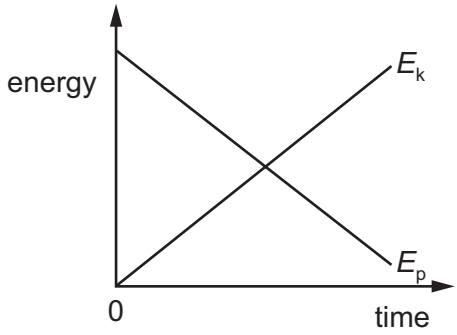

17 The maximum useful output power of a car travelling on a horizontal road is P. The total resistive force acting on the car is kv^2, where v is the speed of the car and k is a constant.

Which equation is correct when the car is travelling at maximum speed?

A $v^3 = \frac{P}{k}$ **B** $v^2 = \frac{P}{k}$ **C** $v = \left(\frac{P}{k}\right)^2$ **D** $v = \left(\frac{P}{k}\right)^3$

18 Initially, four identical uniform blocks, each of mass m and thickness h, are spread on a table.

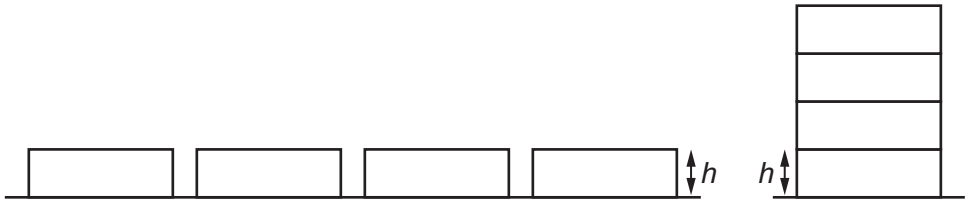

The acceleration of free fall is g.

How much work is done on the blocks in stacking them on top of one another?

A $3mgh$ **B** $6mgh$ **C** $8mgh$ **D** $10mgh$

© UCLES 2019

19 The stress–strain graph for a wire is shown.

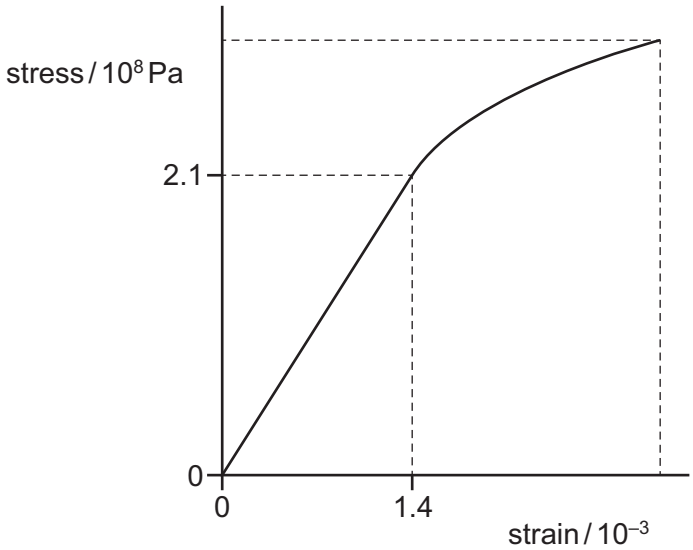

What is the Young modulus of the material of the wire?

A 6.7×10^{-12} Pa

B 6.7×10^{-9} Pa

C 1.5×10^{8} Pa

D 1.5×10^{11} Pa

20 The diagram shows a force–extension graph for a rubber band as the band is extended and then the stretching force is decreased to zero.

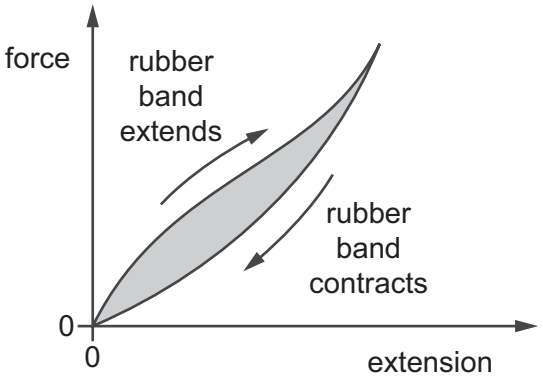

What can be deduced from the graph?

A The rubber band does not return to its original length when the force is decreased to zero.

B The rubber band obeys Hooke's law for the extensions shown.

C The rubber band remains elastic for the extensions shown.

D The shaded area represents the work done in extending the rubber band.

21 Which statement about light waves and sound waves is **not** correct?

A Light waves and sound waves can both demonstrate the Doppler effect.

B Light waves are transverse waves and sound waves are longitudinal waves.

C Light waves can be diffracted but sound waves cannot.

D Light waves can travel in a vacuum but sound waves cannot.

22 The graph represents a sound wave.

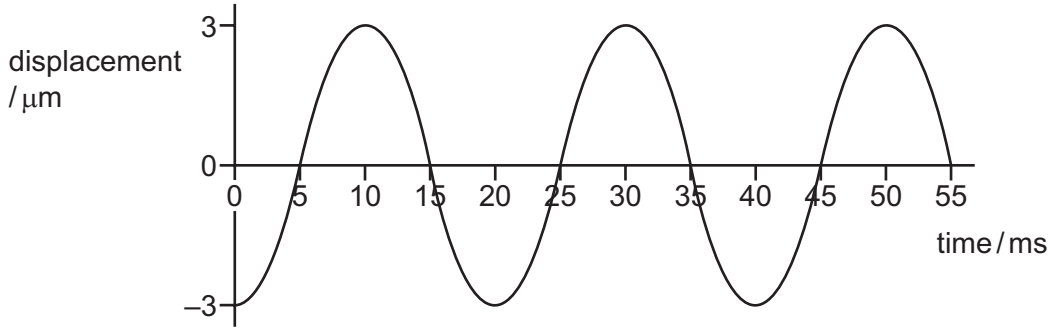

Which statement is correct?

A The wave is longitudinal and has a period of 25 ms.

B The wave is longitudinal and has a frequency of 50 Hz.

C The wave is transverse and has an amplitude of 3 μm.

D The wave is transverse and has a wavelength of 20 ms.

23 A cathode-ray oscilloscope (CRO) is used to display a wave of frequency 5.0 kHz. The display is shown.

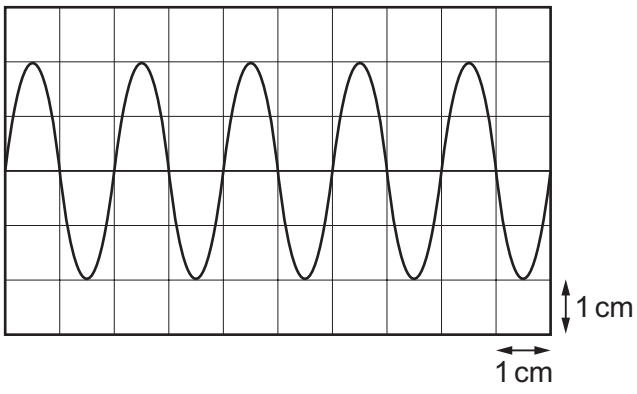

What is the time-base setting of the CRO?

A $10\,\mu s\,cm^{-1}$ **B** $100\,\mu s\,cm^{-1}$ **C** $10\,ms\,cm^{-1}$ **D** $100\,ms\,cm^{-1}$

© UCLES 2019

24 A siren emits sound of frequency 1000 Hz. The siren moves at 20 m s^{-1} towards an observer who is standing still.

The speed of sound in the air is 330 m s^{-1}.

Which expression would correctly give the frequency heard by the observer?

A $\dfrac{1000 \times 330}{330 + 20}$

B $\dfrac{1000 \times 330}{330 - 20}$

C $\dfrac{1000\,(330 + 20)}{330}$

D $\dfrac{1000\,(330 - 20)}{330}$

25 A source of sound of constant power P is situated in an open space. The intensity I of sound at distance r from this source is given by

$$I = \frac{P}{4\pi r^2}.$$

How does the amplitude a of the vibrating air molecules vary with the distance r from the source?

A $a \propto \dfrac{1}{r}$ **B** $a \propto \dfrac{1}{r^2}$ **C** $a \propto r$ **D** $a \propto r^2$

© UCLES 2019

26 In an experiment to demonstrate a stationary wave, two microwave transmitters, emitting waves of wavelength 4 cm, are set facing each other, as shown.

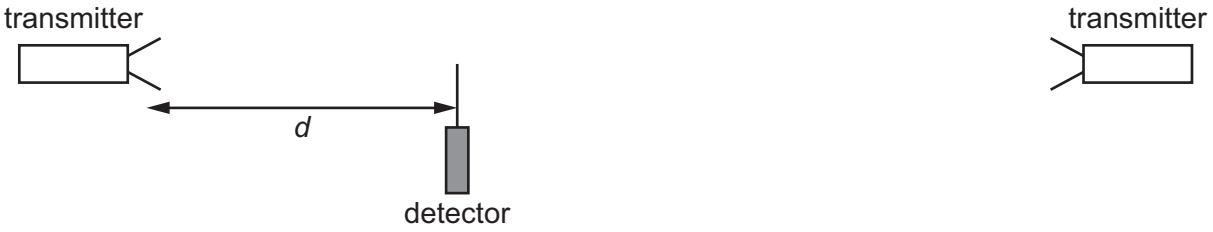

A detector is moved along a straight line between the transmitters. It detects positions of maximum and minimum signal. The detector is a distance *d* from the left-hand transmitter.

Assume that both transmitters are at antinodes of the stationary wave.

Which row gives a value of *d* for a maximum and for a minimum?

	value of *d* for a maximum / cm	value of *d* for a minimum / cm
A	46	48
B	47	48
C	48	47
D	49	47

27 The graph shows how the height of the water surface at a point in a harbour varies with time *t* as waves pass the point.

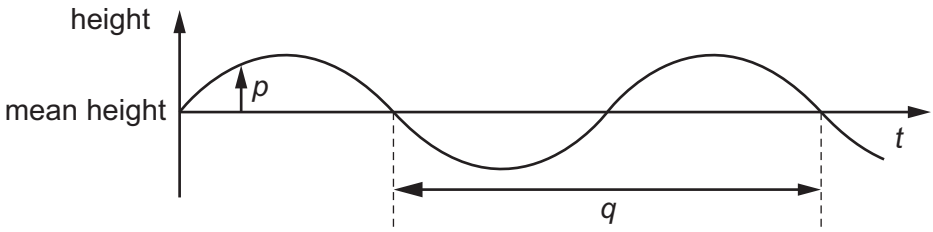

What are *p* and *q*?

	p	*q*
A	displacement	period
B	displacement	wavelength
C	amplitude	period
D	amplitude	wavelength

28 The diagram shows a sketch of a wave pattern over a short period of time.

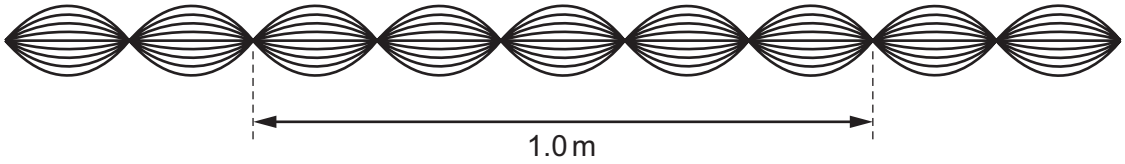

Which description of this wave is correct?

A The wave is longitudinal, has a wavelength of 20 cm and is stationary.

B The wave is transverse, has a wavelength of 20 cm and is stationary.

C The wave is transverse, has a wavelength of 40 cm and is progressive.

D The wave is transverse, has a wavelength of 40 cm and is stationary.

29 The double-slit experiment demonstrates interference between two coherent sources of light waves. In the diagram, the curved lines represent wavefronts.

At which point does complete destructive interference (a minimum) occur?

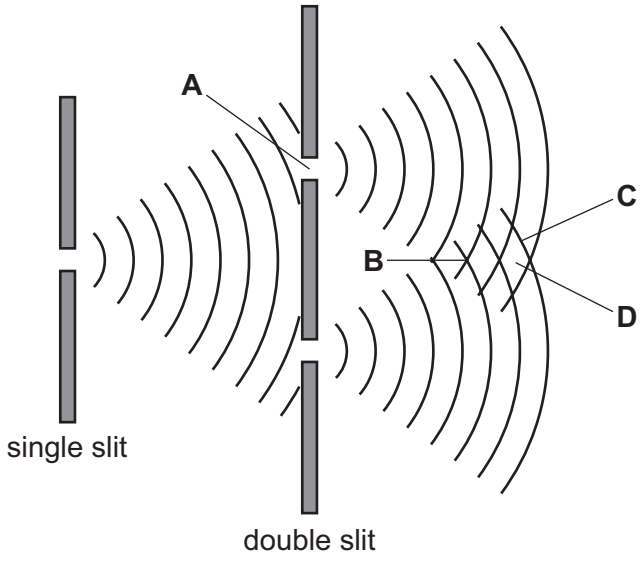

30 Light of wavelength 567 nm is incident normally on a diffraction grating. The grating has 400 lines per mm. A number of diffraction maxima are observed on the far side of the grating.

What is the angle between the second-order maximum and the third-order maximum?

A 13.1° **B** 13.9° **C** 15.9° **D** 27.0°

© UCLES 2019

31 The diagram shows the electric field pattern between two opposite and unequal point charges P and Q.

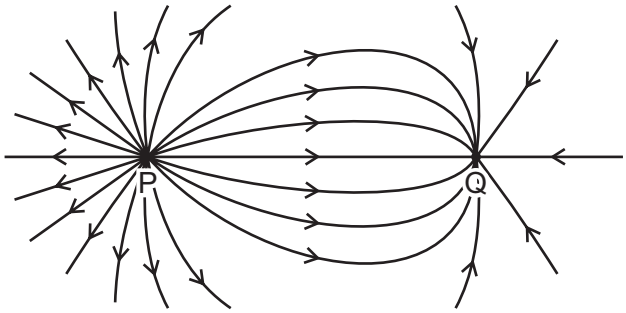

Which statement about the charges is correct?

A P is negatively charged and has a smaller charge than Q.

B P is negatively charged and has a greater charge than Q.

C P is positively charged and has a smaller charge than Q.

D P is positively charged and has a greater charge than Q.

32 A uniform electric field is represented by five horizontal field lines.

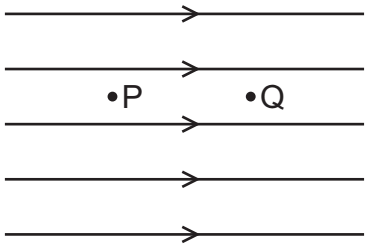

P and Q are two points in the field. The field causes a positively charged particle in a vacuum to move from P to Q.

Which statement must be correct?

A The acceleration of the particle between P and Q is increasing.

B The kinetic energy of the particle at P is the same as the kinetic energy of the particle at Q.

C The force on the particle at Q is greater than the force on the particle at P.

D Work is done on the particle as it moves from P to Q.

33 A metal electrical conductor has a resistance of 5.6 kΩ. A potential difference (p.d.) of 9.0 V is applied across its ends.

How many electrons pass a point in the conductor in one minute?

A 6.0×10^{20} **B** 1.0×10^{19} **C** 6.0×10^{17} **D** 1.0×10^{16}

© UCLES 2019

34 A battery of electromotive force (e.m.f.) 12 V and negligible internal resistance is connected to three resistors, each of resistance 6.0 Ω, as shown.

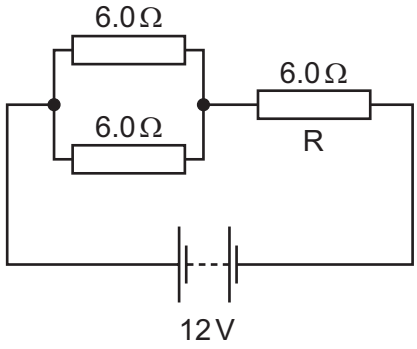

What is the power dissipated in resistor R?

A 2.7 W **B** 6.0 W **C** 11 W **D** 24 W

35 A box containing two electrical components is connected into a circuit.

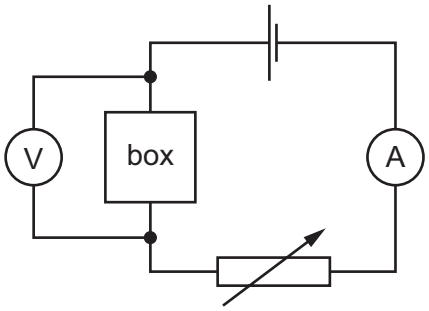

The variable resistor is adjusted and measurements are taken to determine the I–V characteristic for the box, as shown.

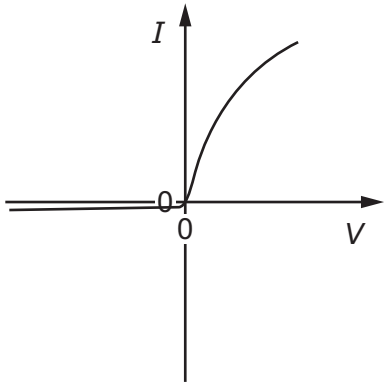

Which arrangement of two electrical components in the box would create the best fit to the measured I–V characteristic?

A a filament lamp and a fixed resistor in parallel

B a filament lamp and a fixed resistor in series

C a semiconductor diode and a filament lamp in parallel

D a semiconductor diode and a filament lamp in series

© UCLES 2019

36 A cell of internal resistance 0.5 Ω is connected to a fixed resistor of resistance 10 Ω.

The resistance of the resistor is changed to 20 Ω.

Which statement is **not** correct?

A The current in the circuit will halve.

B The e.m.f. of the cell will remain constant.

C The power dissipated by the fixed resistor will decrease.

D The terminal p.d. of the cell will increase.

37 Which row correctly describes Kirchhoff's laws?

	Kirchhoff's first law	physics principle applied for first law	Kirchhoff's second law	physics principle applied for second law
A	The sum of the currents entering a junction equals the sum of the currents leaving the junction.	conservation of charge	The sum of the e.m.f.s around any closed loop in a circuit equals the sum of the p.d.s around the same loop.	conservation of energy
B	The sum of the currents entering a junction equals the sum of the currents leaving the junction.	conservation of energy	The sum of the e.m.f.s around any closed loop in a circuit equals the sum of the p.d.s around the same loop.	conservation of charge
C	The sum of the e.m.f.s around any closed loop in a circuit equals the sum of the p.d.s around the same loop.	conservation of energy	The sum of the currents entering a junction equals the sum of the currents leaving the junction.	conservation of charge
D	The sum of the e.m.f.s around any closed loop in a circuit equals the sum of the p.d.s around the same loop.	conservation of charge	The sum of the currents entering a junction equals the sum of the currents leaving the junction.	conservation of energy

© UCLES 2019

38 In the circuit shown, all the resistors are identical.

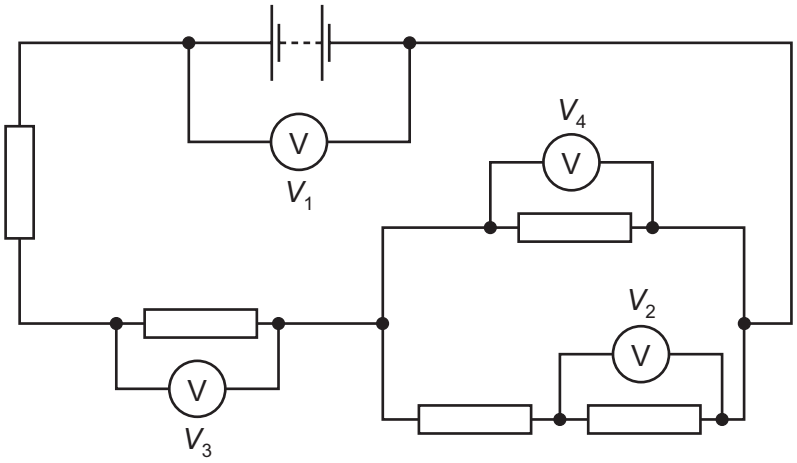

The reading V_1 is 8.0 V and the reading V_2 is 1.0 V.

What are the readings on the other voltmeters?

	V_3 / V	V_4 / V
A	1.5	1.0
B	3.0	2.0
C	4.5	3.0
D	6.0	4.0

39 A radioactive nucleus emits an α-particle or a β^- particle, creating a product nucleus.

Which decay could create the product nucleus stated?

	radioactive nucleus	decay	product nucleus
A	$^{226}_{88}\text{Ra}$	α	$^{224}_{86}\text{Rn}$
B	$^{238}_{92}\text{U}$	α	$^{242}_{94}\text{Pu}$
C	$^{228}_{88}\text{Ra}$	β^-	$^{228}_{87}\text{Fr}$
D	$^{231}_{90}\text{Th}$	β^-	$^{231}_{91}\text{Pa}$

40 Which statement is correct?

A Electrons and neutrinos are fundamental particles.

B Electrons and neutrinos are hadrons.

C Protons and neutrons are leptons.

D Protons and neutrons are quarks.

© UCLES 2019

BLANK PAGE

Permission to reproduce items where third-party owned material protected by copyright is included has been sought and cleared where possible. Every reasonable effort has been made by the publisher (UCLES) to trace copyright holders, but if any items requiring clearance have unwittingly been included, the publisher will be pleased to make amends at the earliest possible opportunity.

To avoid the issue of disclosure of answer-related information to candidates, all copyright acknowledgements are reproduced online in the Cambridge Assessment International Education Copyright Acknowledgements Booklet. This is produced for each series of examinations and is freely available to download at www.cambridgeinternational.org after the live examination series.

Cambridge Assessment International Education is part of the Cambridge Assessment Group. Cambridge Assessment is the brand name of the University of Cambridge Local Examinations Syndicate (UCLES), which itself is a department of the University of Cambridge.

© UCLES 2019